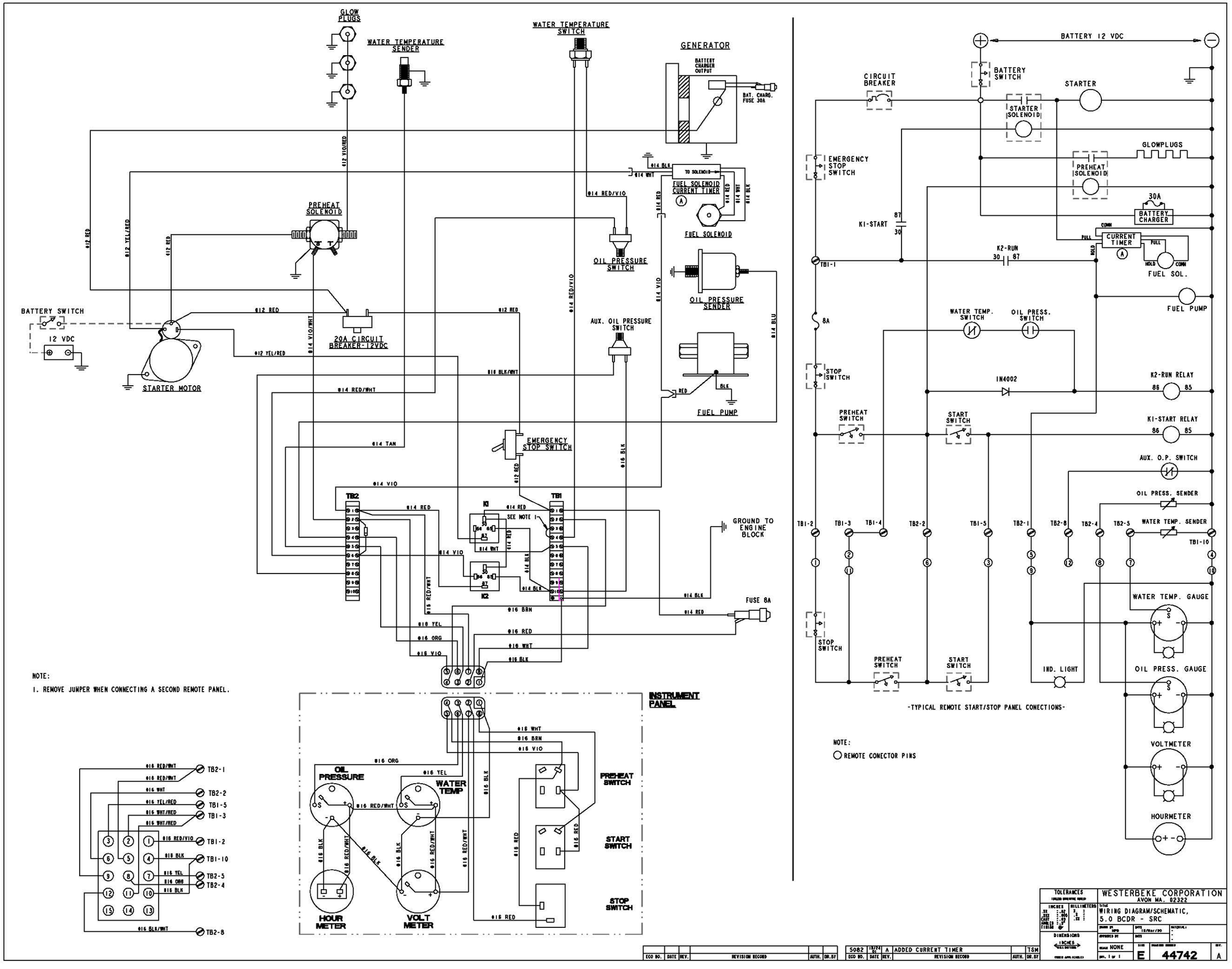
GLOW PLUGS
WATER TEMPERATURE SENDER
WATER TEMPERATURE SWITCH
GENERATOR
BATTERY CHARGER OUTPUT
BAT. CHARG. FUSE 30A
PREHEAT SOLENOID
FUEL SOLENOID CURRENT TIMER
FUEL SOLENOID
OIL PRESSURE SWITCH
OIL PRESSURE SENDER
BATTERY SWITCH
12 VDC
20A CIRCUIT BREAKER-12VDC
STARTER MOTOR
AUX. OIL PRESSURE SWITCH
FUEL PUMP
EMERGENCY STOP SWITCH
TB2
TB1
K1
K2
SEE NOTE 1
GROUND TO ENGINE BLOCK
FUSE 8A
INSTRUMENT PANEL
OIL PRESSURE
WATER TEMP
HOUR METER
VOLT METER
PREHEAT SWITCH
START SWITCH
STOP SWITCH
TB2-1
TB2-2
TB1-5
TB1-3
TB1-2
TB1-10
TB2-5
TB2-4
TB2-8
BATTERY 12 VDC
CIRCUIT BREAKER
BATTERY SWITCH
STARTER
STARTER SOLENOID
GLOWPLUGS
PREHEAT SOLENOID
EMERGENCY STOP SWITCH
30A
BATTERY CHARGER
K1-START
CURRENT TIMER
K2-RUN
FUEL SOL.
FUEL PUMP
TB1-1
8A
WATER TEMP. SWITCH
OIL PRESS. SWITCH
STOP SWITCH
1N4002
K2-RUN RELAY
PREHEAT SWITCH
START SWITCH
K1-START RELAY
AUX. O.P. SWITCH
OIL PRESS. SENDER
WATER TEMP. SENDER
TB1-2
TB1-3
TB1-4
TB2-2
TB1-5
TB2-1
TB2-8
TB2-4
TB2-5
TB1-10
WATER TEMP. GAUGE
OIL PRESS. GAUGE
IND. LIGHT
VOLTMETER
HOURMETER
-TYPICAL REMOTE START/STOP PANEL CONECTIONS-
NOTE:
REMOTE CONECTOR PINS
NOTE:
1. REMOVE JUMPER WHEN CONNECTING A SECOND REMOTE PANEL.
TOLERANCES
WESTERBEKE CORPORATION
AVON MA. 02322
WIRING DIAGRAM/SCHEMATIC,
5.0 BCDR - SRC
DIMENSIONS
SCALE NONE
SHT. 1 OF 1
E
44742
A
5082
A
ADDED CURRENT TIMER
TSM
ECO NO.
DATE
REV.
REVISION RECORD
AUTH.
DR.BY